Low Charge Injection 8-Channel High Voltage Analog Switches with Bleed Resistors

Features

- HVCMOS® technology for high performance
- Very low quiescent power dissipation (10µA max.)
- Output on-resistance (22Ω typ.)
- Integrated bleed resistors on the outputs
- Low parasitic capacitances
- DC to 50MHz small signal frequency response
- -60dB typical output off isolation at 5.0MHz
- CMOS logic circuitry for low power
- Excellent noise immunity
- On-chip shift register, latch and clear logic circuitry
- Flexible high voltage supplies

Applications

- Medical ultrasound imaging
- Piezoelectric transducer drivers

General Description

The Supertex HV232 is a low charge injection 8-channel, high-voltage, analog switch integrated circuit (IC) with bleed resistors. This device can be used in applications requiring high voltage switching controlled by low voltage control signals, such as ultrasound imaging and printers. The bleed resistors eliminate voltage built up on capacitive loads such as piezoelectric transducers. Input data is shifted into an 8-bit shift register which can then be retained in an 8-bit latch. To reduce any possible clock feed-through noise, Latch Enable ($\overline{LE}$) should be left high until all bits are clocked in. Using HVCMOS® technology, this switch combines high voltage bilateral DMOS switches and low power CMOS logic to provide efficient control of high voltage analog signals.

This IC is suitable for various combinations of high voltage supplies, e.g., V_{PP}/V_{NN}: +50V/–150V, or +100V/–100V.

Block Diagram

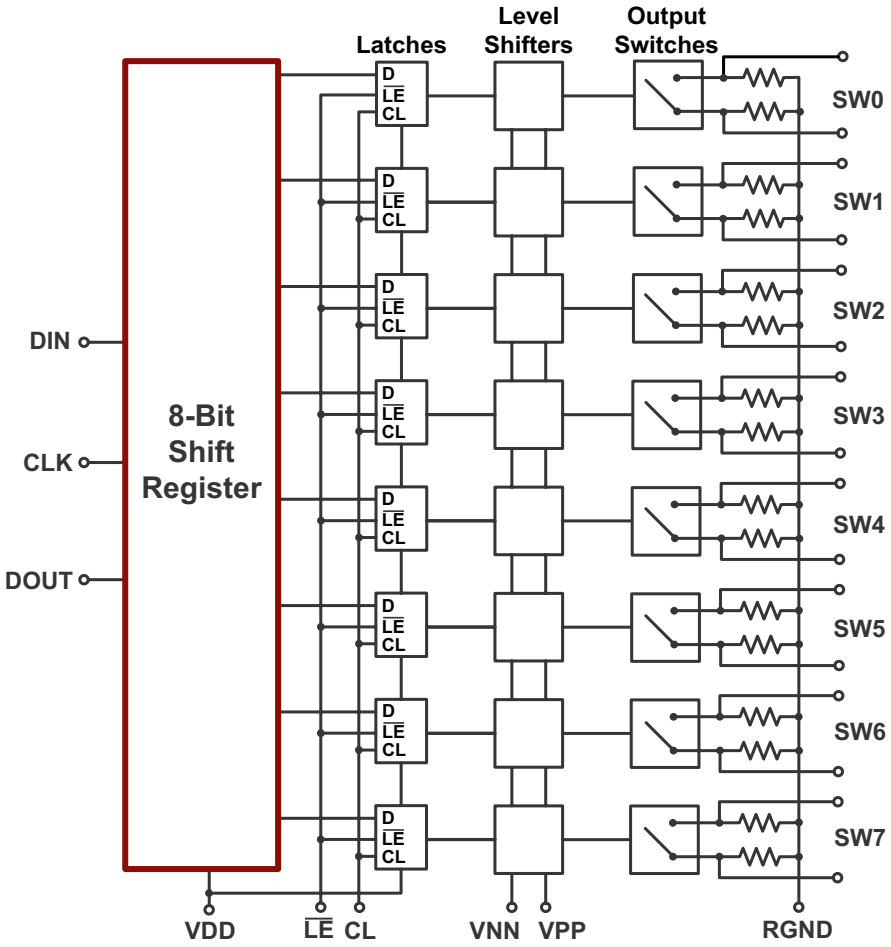

Ordering Information

Part Number	Package Option	Packing
HV232FG-G	48-Lead LQFP	250/Tray
HV232FG-G M931	48-Lead LQFP	1000/Reel
HV232PJ-G	28-Lead PLCC	38/Tube
HV232PJ-G M904	28-Lead PLCC	500/Reel

-G denotes a lead (Pb)-free / RoHS compliant package

Absolute Maximum Ratings

Parameter	Value
V_{DD} logic power supply voltage	-0.5V to +15V
V_{PP} - V_{NN} supply voltage	220V
V_{PP} positive high voltage supply	-0.5V to V_{NN} +200V
V_{NN} negative high voltage supply	+0.5V to -200V
Logic input voltages	-0.5V to V_{DD} +0.3V
Analog signal range	V_{NN} to V_{PP}
Peak analog signal current/channel	3.0A
Storage temperature	-65°C to +150°C
Power dissipation: 48-Lead LQFP 28-Lead PLCC	 1.0W 1.2W

Absolute Maximum Ratings are those values beyond which damage to the device may occur. Functional operation under these conditions is not implied. Continuous operation of the device at the absolute rating level may affect device reliability. All voltages are referenced to device ground.

Operating Conditions

Sym	Parameter	Value
V_{DD}	Logic power supply voltage[1,3]	4.5V to 13.2V
V_{PP}	Positive high voltage supply[1,3]	40V to V_{NN} +200V
V_{NN}	Negative high voltage supply[1,3]	-40V to -160V
V_{IH}	High level input voltage	V_{DD} -1.5V to V_{DD}
V_{IL}	Low-level input voltage	0V to 1.5V
V_{SIG}	Analog signal voltage peak-to-peak[2]	V_{NN} +10V to V_{PP} -10V
T_A	Operating free air temperature	0°C to 70°C

Notes:

1. *Power up/down sequence is arbtrary except GND must be powered -up first and powered down last.*
2. *V_{SIG} must be $V_{NN} \le V_{SIG} \le V_{PP}$ or floating during power up/down transition.*
3. *Rise and fall times of power supplies V_{DD}, V_{PP}, and V_{NN} should not be less than 1.0msec.*

Pin Configuration

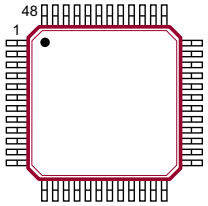

48-Lead LQFP
(top view)

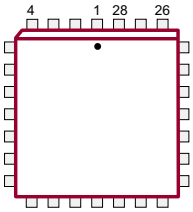

28-Lead PLCC
(top view)

Product Marking

Top Marking



Bottom Marking

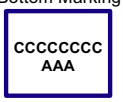

YY = Year Sealed
WW = Week Sealed
L = Lot Number
C = Country of Origin*
A = Assembler ID*
_____ = "Green" Packaging
**May be part of top marking*

Package may or may not include the following marks: Si or ⏻

48-Lead LQFP

Top Marking



Bottom Marking



YY = Year Sealed
WW = Week Sealed
L = Lot Number
C = Country of Origin*
A = Assembler ID*
_____ = "Green" Packaging
**May be part of top marking*

Package may or may not include the following marks: Si or ⏻

28-Lead PLCC

Typical Thermal Resistance

Package	θ_{ja}
48-Lead LQFP	52°C/W
28-Lead PLCC	48°C/W

DC Electrical Characteristics *(Over operating conditions unless otherwise specified)*

Sym	Parameter	0°C		+25°C			+70°C		Unit	Conditions	
		Min	Max	Min	Typ	Max	Min	Max			
R_{ONS}	Small signal switch on-resistance	-	30	-	26	38	-	48	Ω	I_{SIG} = 5.0mA	V_{PP} = +40V, V_{NN} = -160V
		-	25	-	22	27	-	32		I_{SIG} = 200mA	
		-	25	-	22	27	-	30		I_{SIG} = 5.0mA	V_{PP} = +100V, V_{NN} = -100V
		-	18	-	18	24	-	27		I_{SIG} = 200mA	
		-	23	-	20	25	-	30		I_{SIG} = 5.0mA	V_{PP} = +160V, V_{NN} = -40V
		-	22	-	16	25	-	27		I_{SIG} = 200mA	
ΔR_{ONS}	Small signal switch on-resistance matching	-	20	-	5.0	20	-	20	%	I_{SIG} = 5.0mA, V_{PP} = +100V, V_{NN} = -100V	
R_{ONL}	Large signal switch on-resistance	-	-	-	15	-	-	-	Ω	V_{SIG} = V_{PP} -10V, I_{SIG} = 1.0A	
R_{INT}	Output switch shunt resistance	-	-	20	35	50	-	-	KΩ	Output switch to R_{GND}, I_{RINT} = 0.5mA	
I_{SOL}	Switch off leakage per switch	-	5.0	-	1.0	10	-	15	µA	V_{SIG} = V_{PP} -10V	
V_{OS}	DC offset switch off	-	300	-	100	300	-	300	mV	No load	
	DC offset switch on	-	500	-	100	500	-	500	mV	No load	
I_{PPQ}	Quiescent V_{PP} supply current	-	-	-	10	50	-	-	µA	All switches off	
I_{NNQ}	Quiescent V_{NN} supply current	-	-	-	-10	-50	-	-	µA	All switches off	
I_{PPQ}	Quiescent V_{PP} supply current	-	-	-	10	50	-	-	µA	All switches on, I_{SW} = 5.0mA	
I_{NNQ}	Quiescent V_{NN} supply current	-	-	-	-10	-50	-	-	µA	All switches on, I_{SW} = 5.0mA	
I_{SW}	Switch output peak current	-	3.0	-	3.0	2.0	-	2.0	A	V_{SIG} duty cycle - 0.1%	
f_{SW}	Output switching frequency	-	-	-	-	50	-	-	kHz	Duty cycle = 50%	
I_{PP}	Supply current	-	6.5	-	-	7.0	-	8.0	mA	V_{PP} = +40V, V_{NN} = -160V	All output switches are turning On and Off at 50kHz with no load
		-	4.0	-	-	5.0	-	5.5		V_{PP} = +100V, V_{NN} = -100V	
		-	4.0	-	-	5.0	-	5.5		V_{PP} = +160V, V_{NN} = -40V	
I_{NN}	Supply curent	-	6.5	-	-	7.0	-	8.0	mA	V_{PP} = +40V, V_{NN} = -160V	All output switches are turning On and Off at 50kHz with no load
		-	4.0	-	-	5.0	-	5.5		V_{PP} = +100V, V_{NN} = -100V	
		-	4.0	-	-	5.0	-	5.5		V_{PP} = +160V, V_{NN} = -40V	
I_{DD}	Logic supply average current	-	4.0	-	-	4.0	-	4.0	mA	f_{CLK} = 5.0MHz, V_{DD} = 5.0V	
I_{DDQ}	Logic supply quiescent current	-	10	-	-	10	-	10	µA	---	
I_{SOR}	Data out source current	0.45	-	0.45	0.70	-	0.40	-	mA	V_{OUT} = V_{DD} -0.7V	
I_{SINK}	Data out sink current	0.45	-	0.45	0.70	-	0.40	-	mA	V_{OUT} = 0.7V	
C_{IN}	Logic input capacitance	-	10	-	-	10	-	10	pF	---	

AC Electrical Characteristics *(Over recommended operating conditions, V_{DD} = 5.0V, unless otherwise specified)*

Sym	Parameter	0°C		+25°C			+70°C		Unit	Conditions
		Min	Max	Min	Typ	Max	Min	Max		
t_{SD}	Set up time before $\overline{LE}$ rises	150	-	150	-	-	150	-	ns	---
t_{WLE}	Time width of $\overline{LE}$	150	-	150	-	-	150	-	ns	---
t_{DO}	Clock delay time to data out	55	150	60	-	150	70	150	ns	---
t_{WCL}	Time width of CL	150	-	150	-	-	150	-	ns	---
t_{SU}	Set up time data to clock	15	-	15	8.0	-	20	-	ns	---
t_H	Hold time data from clock	35	-	35	-	-	35	-	ns	---
f_{CLK}	Clock frequency	-	5.0	-	-	5.0	-	5.0	MHz	50% Duty cycle, $f_{DATA} = f_{CLK}/2$
t_R, t_F	Clock rise and fall times	-	1.0	-	-	1.0	-	1.0	µs	---
t_{ON}	Turn on time	-	5.0	-	-	5.0	-	5.0	µs	$V_{SIG} = V_{PP}$-10V, R_L = 10kΩ
t_{OFF}	Turn off time	-	5.0	-	-	5.0	-	5.0	µs	$V_{SIG} = V_{PP}$-10V, R_L = 10kΩ
dv/dt	Maximun V_{SIG} slew rate	-	20	-	-	20	-	20	V/ns	V_{PP} = +160V, V_{NN} = -40V
		-	20	-	-	20	-	20		V_{PP} = +100V, V_{NN} = -100V
		-	20	-	-	20	-	20		V_{PP} = +40V, V_{NN} = -160V
K_O	Off isolation	-30	-	-30	-33	-	-30	-	dB	f = 5.0MHz, 1.0kΩ/15pF load
		-58	-	-58	-	-	-58	-		f = 5.0MHz, 50Ω load
K_{CR}	Switch crosstalk	-60	-	-60	-70	-	-60	-	dB	f = 5.0MHz, 50Ω load
I_{ID}	Output switch isolation diode current	-	300	-	-	300	-	300	mA	300ns pulse width, 2.0% duty cycle
$C_{SG(OFF)}$	Off capacitance SW to GND	5.0	17	5.0	12	17	5.0	17	pF	0V, f = 1.0MHz
$C_{SG(ON)}$	On capacitance SW to GND	25	50	25	38	50	25	50	pF	0V, f = 1.0MHz
$+V_{SPK}$	Output voltage spike	-	-	-	-	150	-	-	mV	V_{PP} = +40V, V_{NN} = -160V, R_L = 50Ω
$-V_{SPK}$		-	-	-	-	150	-	-		
$+V_{SPK}$		-	-	-	-	150	-	-		V_{PP} = +100V, V_{NN} = -100V, R_L = 50Ω
$-V_{SPK}$		-	-	-	-	150	-	-		
$+V_{SPK}$		-	-	-	-	150	-	-		V_{PP} = +160V, V_{NN} = -40V, R_L = 50Ω
$-V_{SPK}$		-	-	-	-	150	-	-		

Truth Table

D0	D1	D2	D3	D4	D5	D6	D7	$\overline{LE}$	CLK	SW0	SW1	SW2	SW3	SW4	SW5	SW6	SW7
L								L	L	Off							
H								L	L	On							
	L							L	L		Off						
	H							L	L		On						
		L						L	L			Off					
		H						L	L			On					
			L					L	L				Off				
			H					L	L				On				
				L				L	L					Off			
				H				L	L					On			
					L			L	L						Off		
					H			L	L						On		
						L		L	L							Off	
						H		L	L							On	
							L	L	L								Off
							H	L	L								On
X	X	X	X	X	X	X	X	H	L	Hold Previous State							
X	X	X	X	X	X	X	X	X	H	All Switches Off							

Notes:

1. *The eight switches operate independently.*
2. *Serial data is clocked in on the L to H transition of the CLK.*
3. *The switches go to a state retaining their present condition at the rising edge of $\overline{LE}$. When $\overline{LE}$ is low the shift register data flow through the latch.*
4. *D_{OUT} is high when data in the shift register 7 is high.*
5. *Shift register clocking has no effect on the switch states if $\overline{LE}$ is high.*
6. *The CLR clear input overrides all other inputs.*

Logic Timing Waveforms

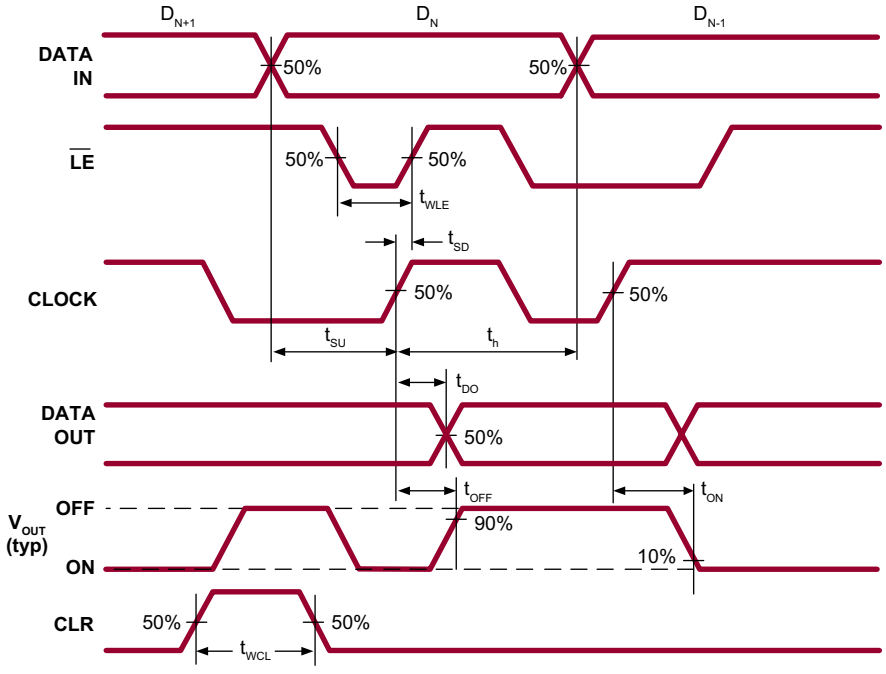

Test Circuits

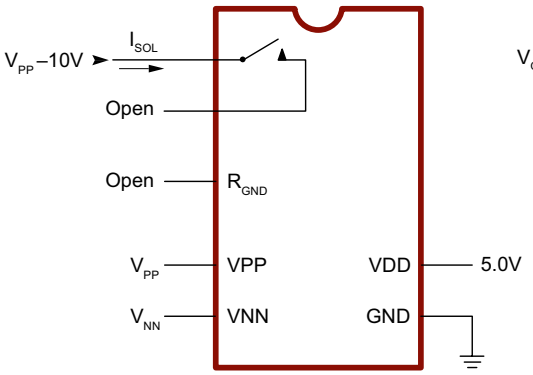

Switch OFF Leakage

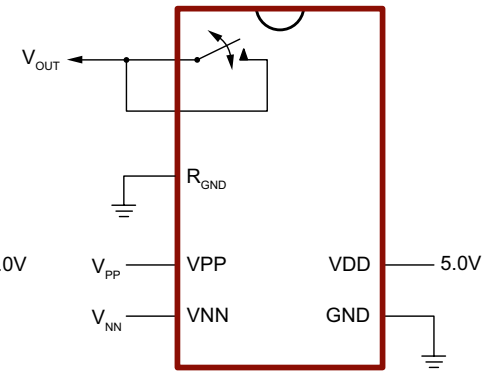

DC Offset ON/OFF

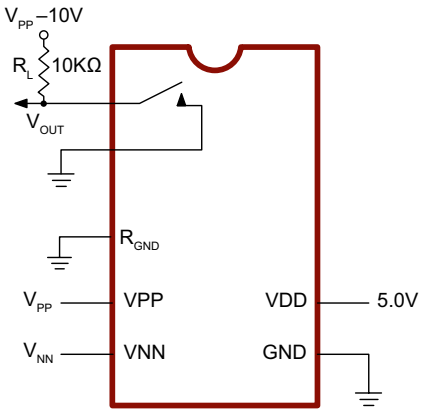

T_{ON}/T_{OFF} Test Circuit

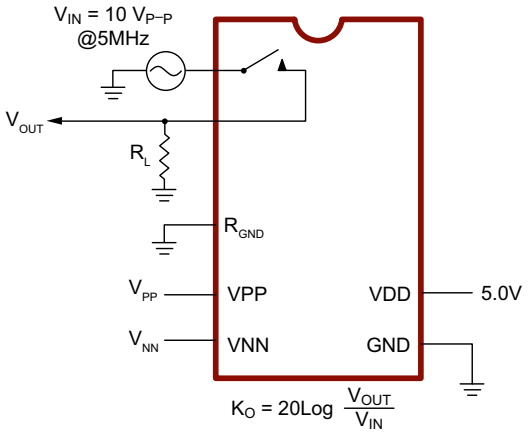

OFF Isolation

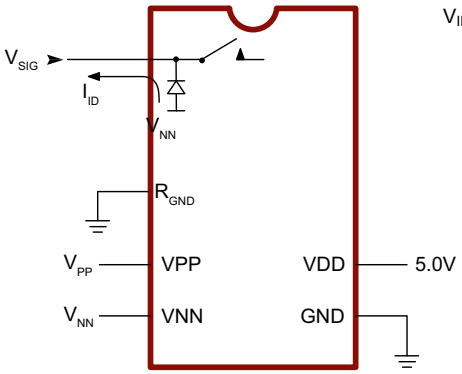

Isolation Diode Current

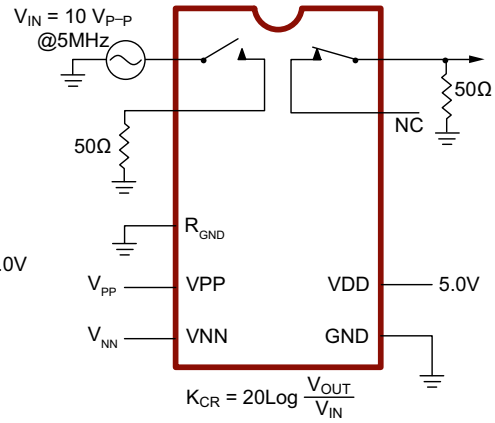

Crosstalk

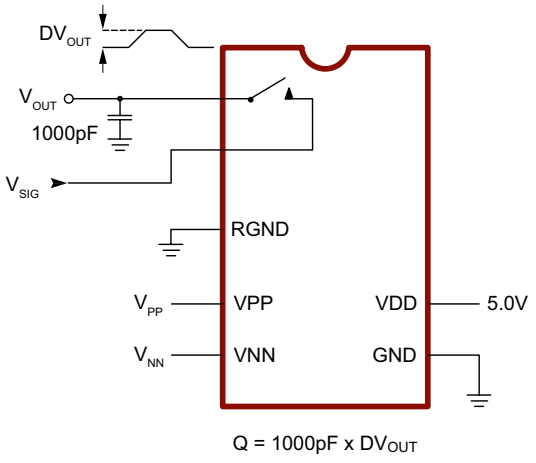

Charge Injection

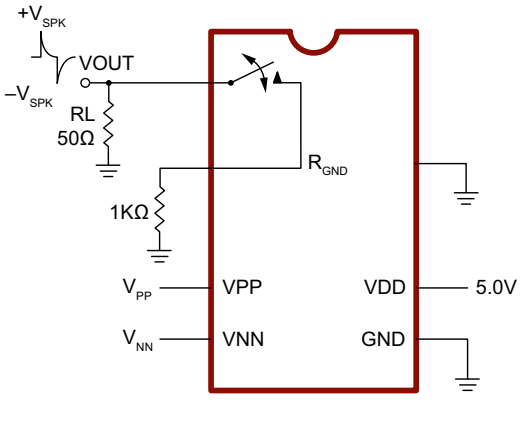

Output Voltage Spike

Pin Description (48-Lead LQFP)

Pin	Function	Pin	Function
1	SW5	25	VNN
2	N/C	26	N/C
3	SW4	27	RGND
4	N/C	28	GND
5	SW4	29	VDD
6	N/C	30	N/C
7	N/C	31	N/C
8	SW3	32	N/C
9	N/C	33	DIN
10	SW3	34	CLK
11	N/C	35	$\overline{\text{LE}}$
12	SW2	36	CLR
13	N/C	37	DOUT
14	SW2	38	N/C
15	N/C	39	SW7
16	SW1	40	N/C
17	N/C	41	SW7
18	SW1	42	N/C
19	N/C	43	SW6
20	SW0	44	N/C
21	N/C	45	SW6
22	SW0	46	N/C
23	N/C	47	SW5
24	VPP	48	N/C

Pin Description (28-Lead PLCC)

Pin	Function	Pin	Function
1	SW3	15	N/C
2	SW3	16	DIN
3	SW2	17	CLK
4	SW2	18	$\overline{\text{LE}}$
5	SW1	19	CL
6	SW1	20	DOUT
7	SW0	21	SW7
8	SW0	22	SW7
9	N/C	23	SW6
10	VPP	24	SW6
11	RGND	25	SW5
12	VNN	26	SW5
13	GND	27	SW4
14	VDD	28	SW4

48-Lead LQFP Package Outline (FG)

7.00x7.00mm body, 1.60mm height (max), 0.50mm pitch

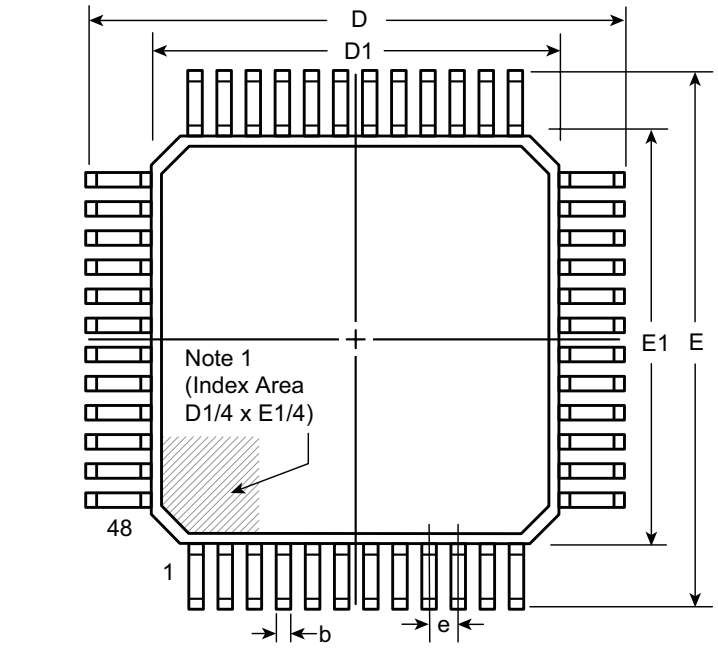

Top View

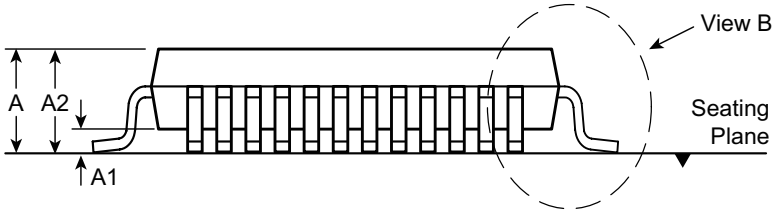

Side View

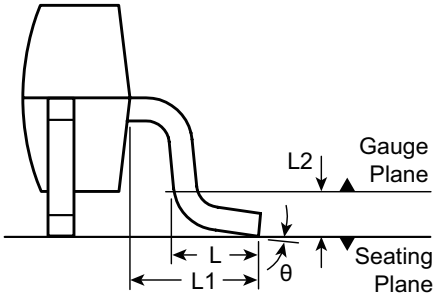

View B

Note:

1. *A Pin 1 identifier must be located in the index area indicated. The Pin 1 identifier can be: a molded mark/identifier; an embedded metal marker; or a printed indicator.*

Symbol		A	A1	A2	b	D	D1	E	E1	e	L	L1	L2	□
Dimension (mm)	MIN	1.40*	0.05	1.35	0.17	8.80*	6.80*	8.80*	6.80*	0.50 BSC	0.45	1.00 REF	0.25 BSC	0°
	NOM	-	-	1.40	0.22	9.00	7.00	9.00	7.00		0.60			3.5°
	MAX	1.60	0.15	1.45	0.27	9.20*	7.20*	9.20*	7.20*		0.75			7°

JEDEC Registration MS-026, Variation BBC, Issue D, Jan. 2001.
** This dimension is not specified in the JEDEC drawing.*

Drawings are not to scale.

Supertex Doc. #: *DSPD-48LQFPFG Version, D041309.*

28-Lead PLCC Package Outline (PJ)

.453x.453in. body, .180in. height (max), .050in. pitch

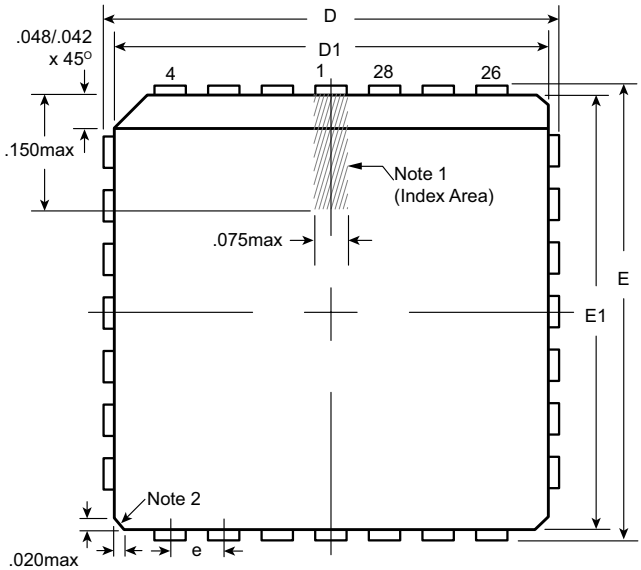

Top View

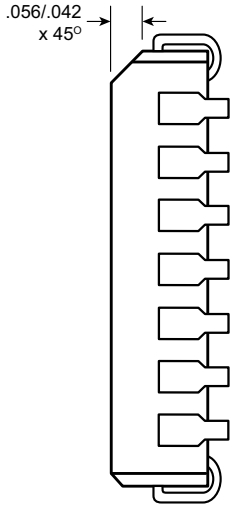

Vertical Side View

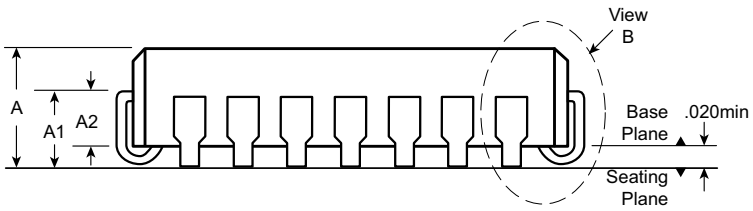

Horizontal Side View

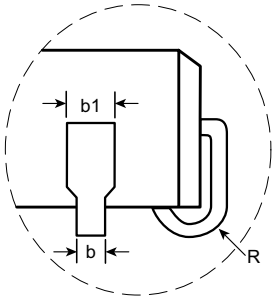

View B

Notes:

1. *A Pin 1 identifier must be located in the index area indicated. The Pin 1 identifier can be: a molded mark/identifier; an embedded metal marker; or a printed indicator.*
2. *Actual shape of this feature may vary.*

Symbol		A	A1	A2	b	b1	D	D1	E	E1	e	R
Dimension (inches)	MIN	.165	.090	.062	.013	.026	.485	.450	.485	.450	.050 BSC	.025
	NOM	.172	.105	-	-	-	.490	.453	.490	.453		.035
	MAX	.180	.120	.083	.021	.032	.495	.456	.495	.456		.045

JEDEC Registration MS-018, Variation AB, Issue A, June, 1993.
Drawings not to scale.
Supertex Doc. #: *DSPD-28PLCCPJ, Version B031111.*

(The package drawing(s) in this data sheet may not reflect the most current specifications. For the latest package outline information go to http://www.supertex.com/packaging.html.)

Supertex inc. does not recommend the use of its products in life support applications, and will not knowingly sell them for use in such applications unless it receives an adequate "product liability indemnification insurance agreement." **Supertex inc.** does not assume responsibility for use of devices described, and limits its liability to the replacement of the devices determined defective due to workmanship. No responsibility is assumed for possible omissions and inaccuracies. Circuitry and specifications are subject to change without notice. For the latest product specifications refer to the **Supertex inc.** (website: http//www.supertex.com)

©2013 **Supertex inc.** All rights reserved. Unauthorized use or reproduction is prohibited.

Supertex inc.
1235 Bordeaux Drive, Sunnyvale, CA 94089
Tel: 408-222-8888
www.supertex.com